REVISIONS				
REV.	ECO. NO	DESCRIPTION	DATE	BY
A	1516	INITIAL RELEASE	11/12/2007	VJ
B	1810	ADD HB TERMINATION, UPDATE LAYOUT	9/25/2008	ASK

PART NUMBER CODING

_ _ B60D_ _ _ -S621

MATERIAL (INSULATOR/CONTACT)

E = BLACK, PBT/PHOSPHOR BRONZE
OPERATING TEMP: -65°C TO +125°C
PROCESSING TEMP: 260°C FOR 10 SECS MAX

R = BLACK, PPS/PHOSPHOR BRONZE
OPERATING TEMP: -65°C TO +125°C
PROCESSING TEMP: 260°C FOR 120 SECS MAX

G = BLACK, PA9T/PHOSPHOR BRONZE
OPERATING TEMP: -65°C TO +125°C
PROCESSING TEMP: 260°C FOR 120 SECS MAX

H = BLACK, PBT/BERYLLIUM COPPER
OPERATING TEMP: -65°C TO +125°C
PROCESSING TEMP: 260°C FOR 10 SECS MAX

A = BLACK, PPS/BERYLLIUM COPPER
OPERATING TEMP: -65°C TO +150°C
PROCESSING TEMP: 260°C FOR 120 SECS MAX

J = BLACK, PA9T/BERYLLIUM COPPER
OPERATING TEMP: -65°C TO +150°C
PROCESSING TEMP: 260°C FOR 120 SECS MAX

(CONSULT FACTORY FOR OTHER MATERIALS)

MOUNTING STYLE
S = ø.125 SIDE MOUNTING (PAGE 1)
D = FLUSH MOUNTING (PAGE 2)
N = NO MOUNTING EARS (PAGE 2)
T = #4-40 THREADED INSERTS (PAGE 2)
R = METAL BOARD LOCK (PAGE 2)

TERMINATION TYPE
HA = .100" [2.54 mm] STAGGERED DIP SOLDER, .050" CENTERS
HB = .170" [4.32 mm] STAGGERED DIP SOLDER, .050" CENTERS

PLATING
ALL PLATINGS ARE LEAD FREE AND HAVE .000050" NICKEL UNDERPLATE

	CONTACT SURFACE	TERMINATION
B =	.000010" GOLD	.000100" PURE TIN, MATTE
C =	.000030" GOLD	.000100" PURE TIN, MATTE

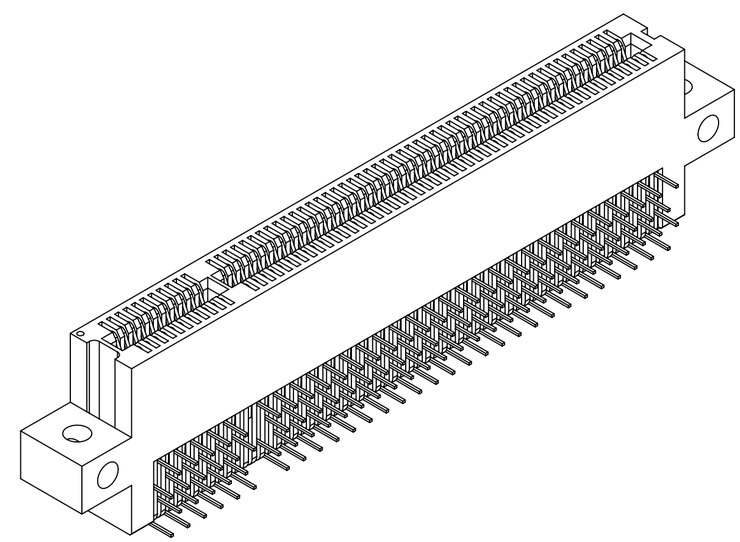

NOTES:

1. MATERIALS:
   A. INSULATOR: SEE PART NUMBER CODING.
   B. CONTACT: SEE PART NUMBER CODING.
   C. PLATING: SEE PART NUMBER CODING.
2. THERMAL:
   A. OPERATING TEMPERATURE: SEE PART NUMBER CODING.
   B. PROCESSING TEMP: SEE PART NUMBER CODING.
   C. UL FLAMMABILITY RATING: 94V-0.
3. ELECTRICAL:
   A. DIELECTRIC WITHSTANDING VOLTAGE: MATED CONNECTOR MUST EXHIBIT NO EVIDENCE OF BREAKDOWN, FLASHOVER, OR DETERIORATION FROM AN APPLIED VOLTAGE OF 225 VAC (VALUE HAS BEEN DE-RATED), RMS 60 Hz WHEN TESTED IN ACCORDANCE WITH MIL-STD-1344, METHOD 3001. DURATION OF APPLICATION SHALL BE 5 SECS MIN.
   B. INSULATION RESISTANCE (IR): 5,000 MEGOHMS @ 500 VOLTS ±10% WHEN TESTED IN ACCORDANCE WITH MIL-STD-1344, METHOD 3003 @ 25°C.
   C. CONTACT RESISTANCE: 30 MILLIOHM MAX AT RATED CURRENT WHEN TESTED PER MIL-STD-202, METHOD 307 @ 25°C ±3°C.
   D. CURRENT RATING: 1 AMP PER CONTACT.
4. MECHANICAL:
   A. CONNECTOR IDENTIFICATION: THE PART SHALL BE MARKED WITH A LOT CODE AS A MINIMUM. IF SPACE PERMITS ALSO MARK PART WITH SULLINS WEBSITE, AND PART NUMBER.
   B. DURABILITY: 500 CYCLES MINIMUM.
   C. BOARD THICKNESS ACCOMMODATED: .062 ±.008"
   D. BOARD INSERTION FORCE: 16 OZ MAX PER CONTACT PAIR WHEN USING A .062" TEST BLADE. INTERNAL INSPECTION TO BE PER SULLIN'S WORK INSTRUCTION W17.3-01.
   E. BOARD WITHDRAWAL FORCE: 1 OUNCE MINIMUM PER CONTACT PAIR USING .062" PCB.
5. MODIFICATION:
   A. CARDSLOT BARRIERS WITHOUT GUIDEPOSTS.

RoHS COMPLIANT

CUSTOMER COPY

UNLESS OTHERWISE SPECIFIED:
DIMENSIONS ARE IN INCHES[MM]
TOLERANCES:
ANGULAR: ± 30'
.XX=± .02 [.508]
.XXX=± .005 [.1270]
.XXXX=± .0005 [.0127]
SURFACE FINISH: 63 Ra
REMOVE ALL BURRS AND SHARP EDGES .010 MAX

INTERPRET DIMENSIONS AND GEOMETRIC TOLERANCING
PER: ANSI Y14.5M-1994

	DATE	NAME
DRAWN	11/12/2007	V. JARA

THE INFORMATION HEREIN CONTAINS PROPIETARY INFORMATION OF SULLINS ELECTRONICS AND IS NOT TO BE REPRODUCED, USED OR DISCLOSED TO OTHERS FOR ANY PURPOSE EXCEPT AS SPECIFICALLY AUTHORIZED IN WRITING BY AN OFFICER OF SULLINS ELECTRONICS.

SULLINS CONNECTOR SOLUTIONS

DESCRIPTION: EDGECARD, .050 CC, RAB

PART NUMBER: **_ _B60D_ _ _-S621, (DHA, DHB)**

SIZE: C | DWG. NO.: C10680 | REV: B

SCALE: 2:1 | SHEET 1 OF 3

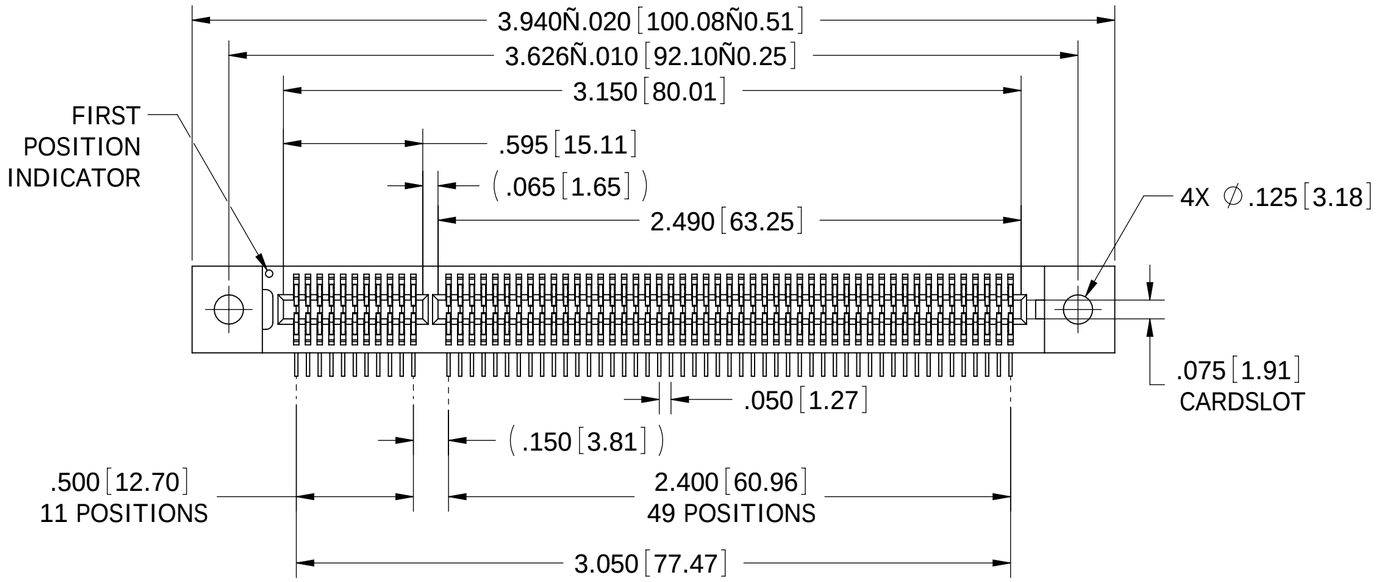

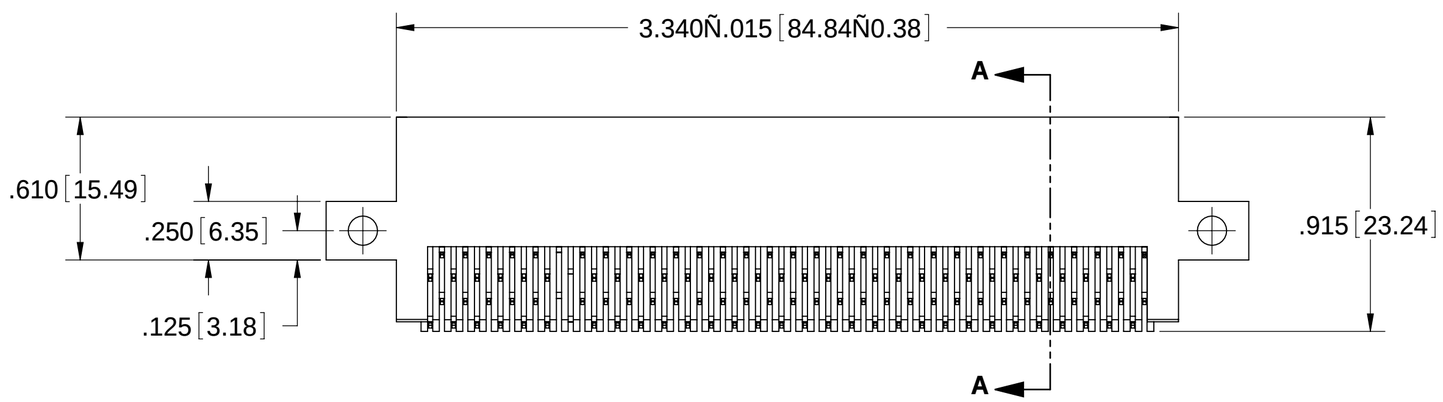

_ _B60D_ _S-S261

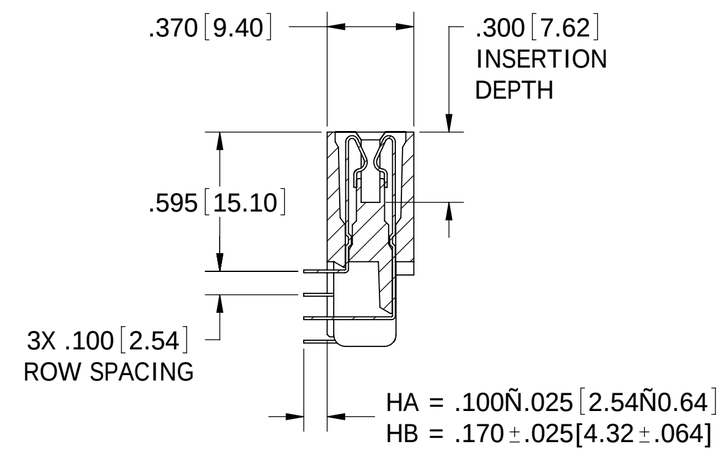

SECTION A-A

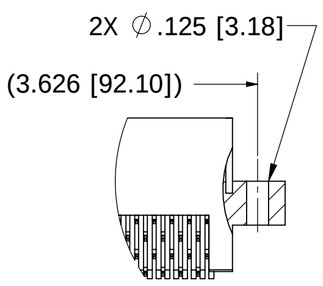

_ _B60D_ _D-S261

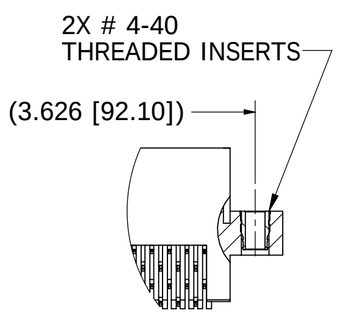

_ _B60D_ _T-S261

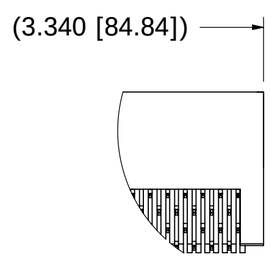

_ _B60D_ _N-S261

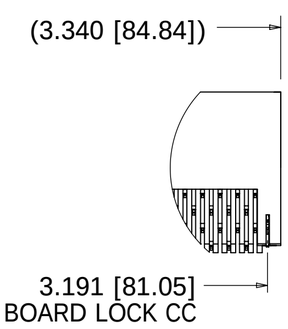

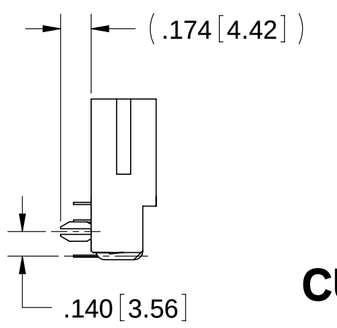

_ _B60D_ _R-S261

MOUNTING STYLES

CUSTOMER COPY

RoHS COMPLIANT

SULLINS CONNECTOR SOLUTIONS

DESCRIPTION	EDGECARD, .050 CC, RAB
PART NUMBER	_ _B60D_ _ _-S621, (DHA, DHB)
SIZE C	DWG. NO. C10680
REV	B
SCALE: 2:1	SHEET 2 OF 3

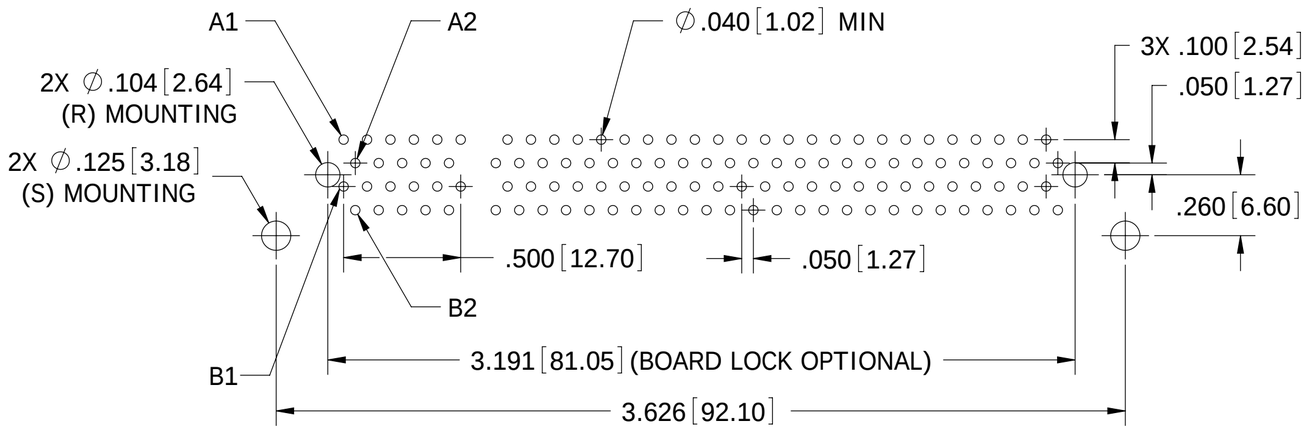

PCB LAYOUT, COMPONENT SIDE

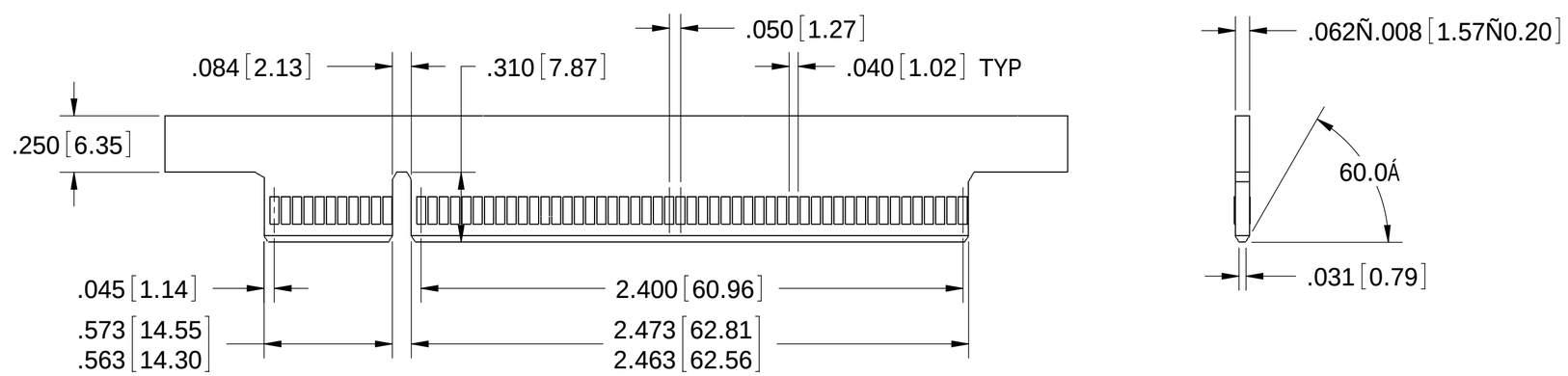

DAUGHTER CARD LAYOUT

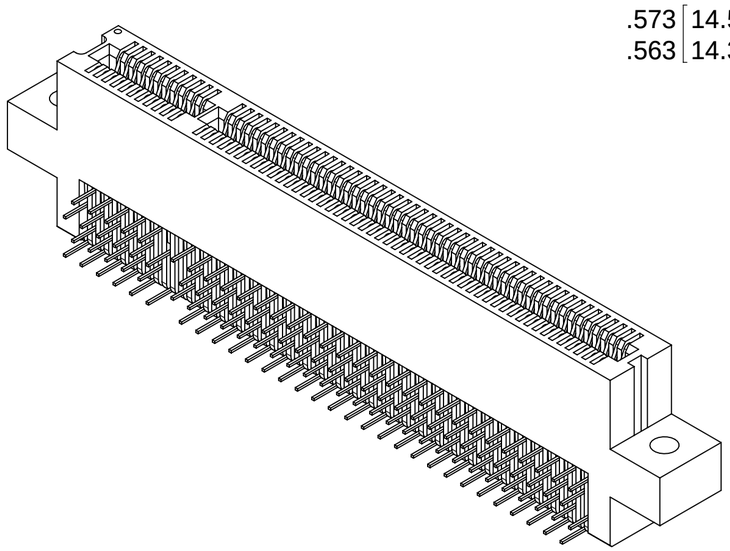

CUSTOMER COPY

RoHS COMPLIANT

SULLINS CONNECTOR SOLUTIONS

DESCRIPTION	EDGECARD, .050 CC, RAB
PART NUMBER	__B60D___-S621, (DHA, DHB)
SIZE C	DWG. NO. C10680
REV	B
SCALE: 2:1	SHEET 3 OF 3

FILE NAME: Z:\COMPONENTS\Part Assemblies\Customer Drawings\Customer Drawings for Catalog\C10680, __B60D___-S621, (DHA, DHB) PRINT: 10/9/2008